Main Frame

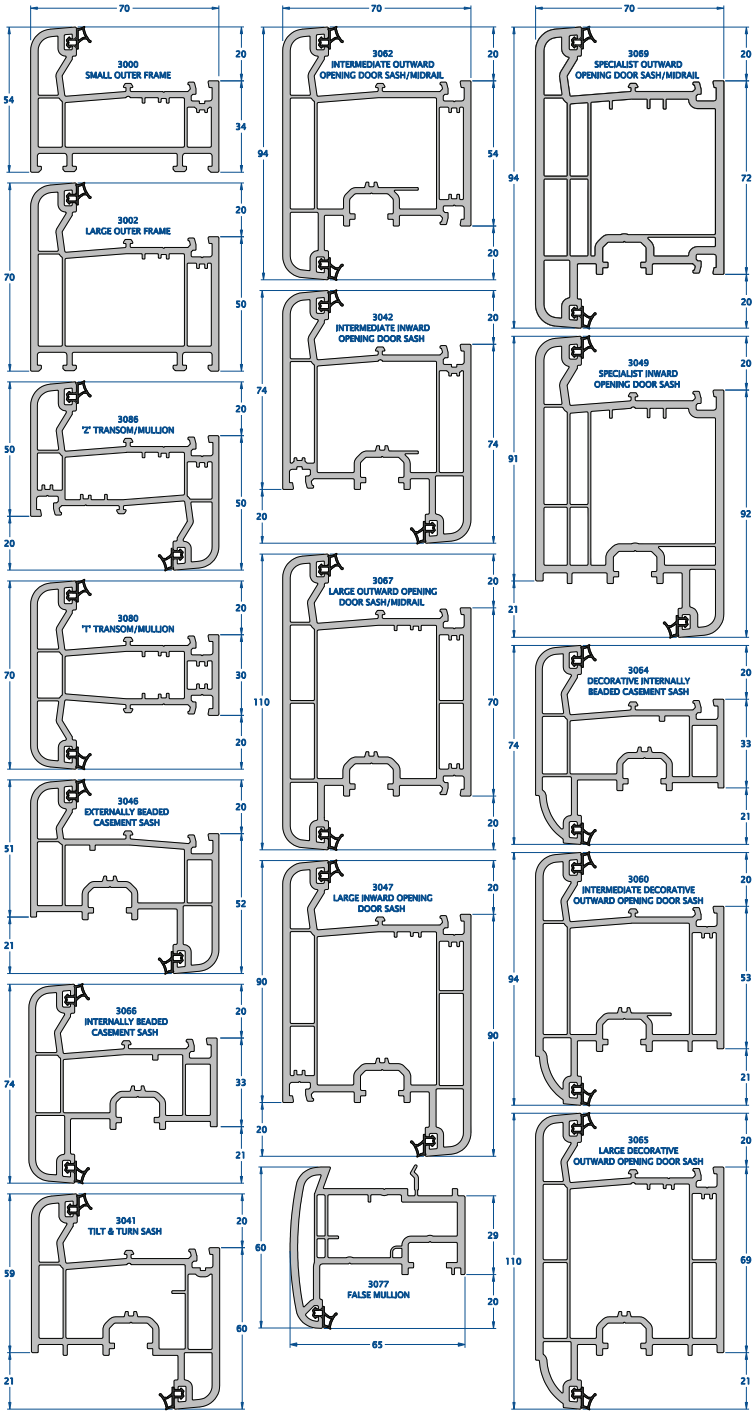

Ancillaries

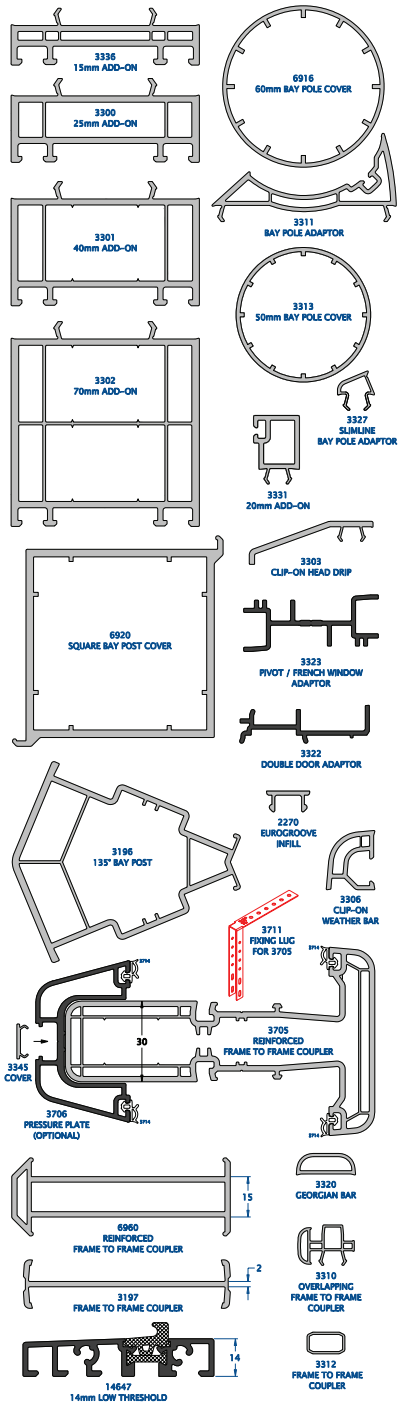

Glazing Beads & Gaskets

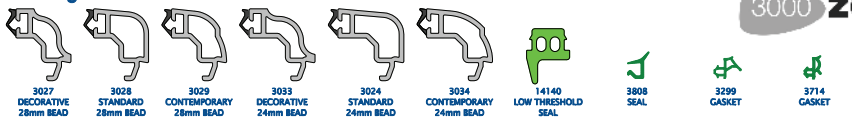

3000 zendow

Reinforcement

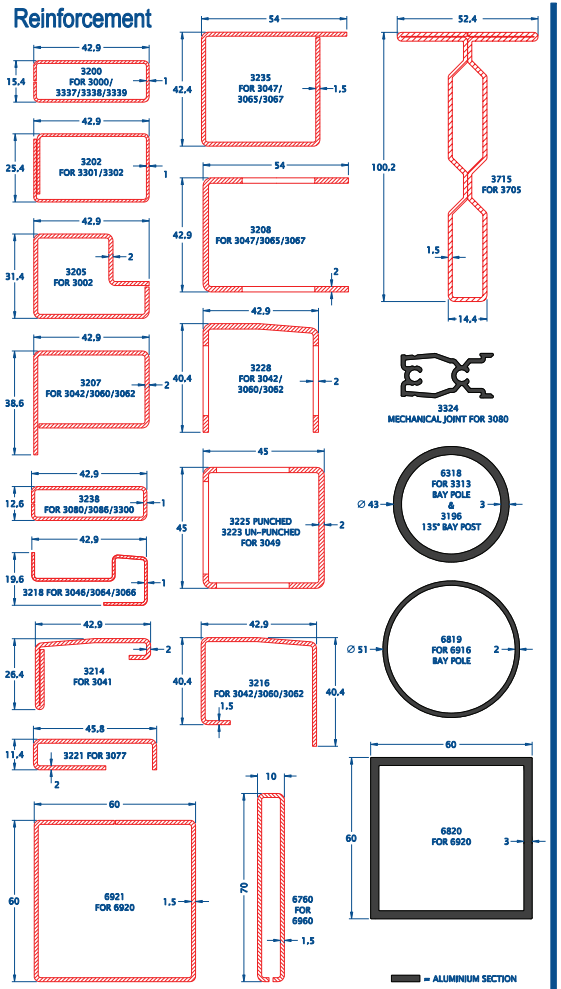

Injection Mouldings & Remaining Ancillaries

(Scale 1:2)

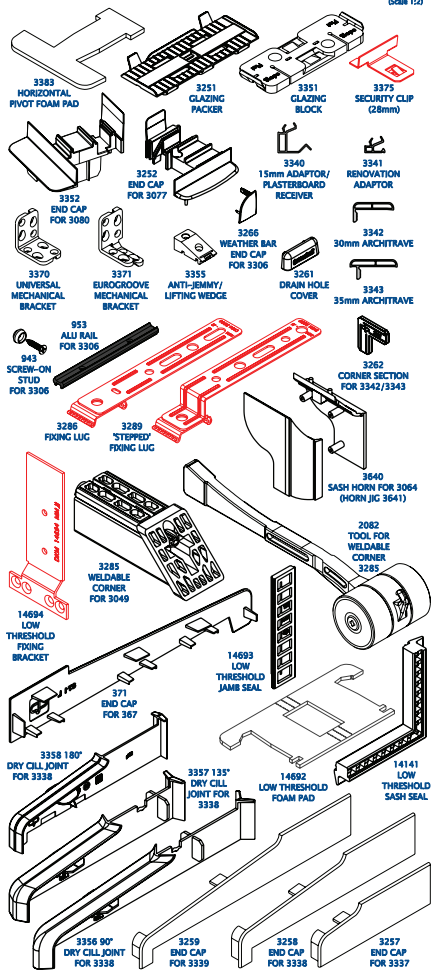

Cills

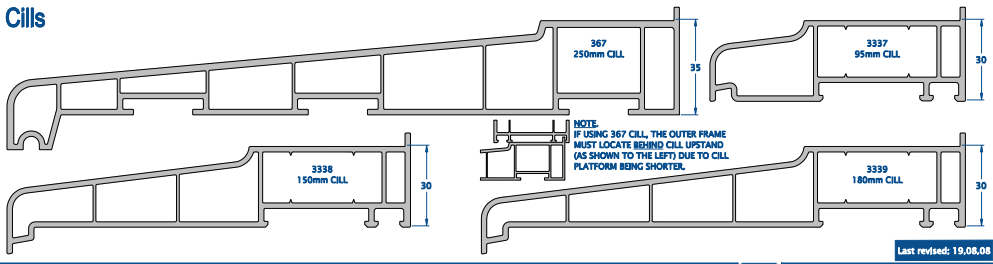

NOTE:
IF USING 367 CILL, THE OUTER FRAME MUST LOCATE BEHIND CILL UPSTAND (AS SHOWN TO THE LEFT) DUE TO CILL PLATFORM BEING SHORTER.

Last revised: 19.08.08

DECEUNINCK LTD.
STANIER ROAD, PORTE MARSH IND EST, CALNE WILTSHIRE SN11 9PX
TEL. + 44 1249 816969 / FAX. + 44 1249 815234
http://www.deceuninck.com / e-mail: Deceuninck.Ltd@deceuninck.com